syndown

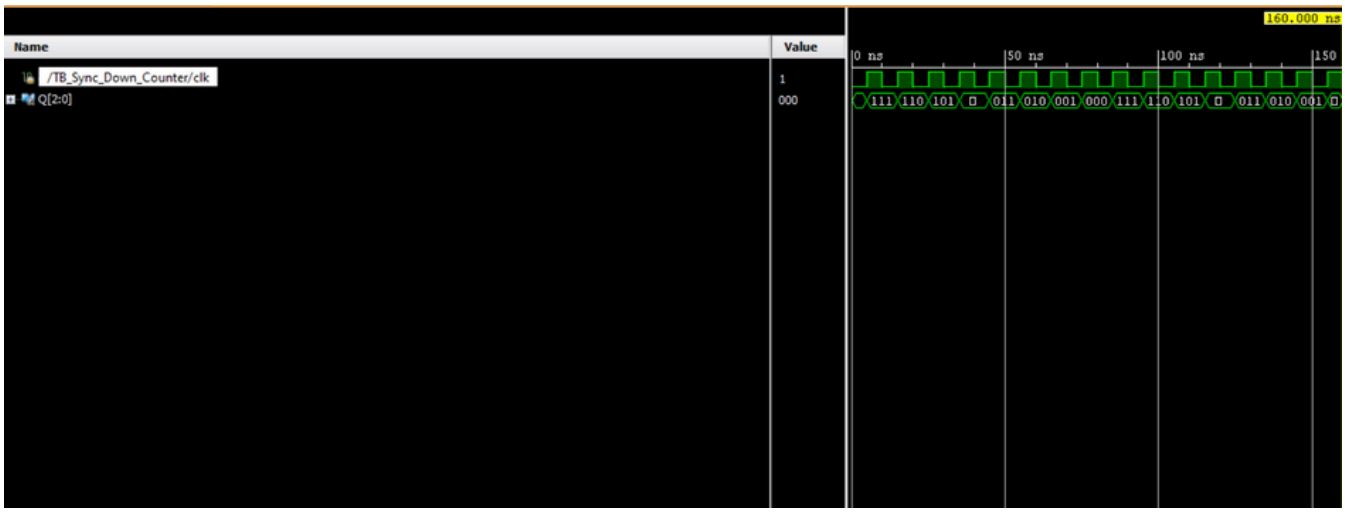

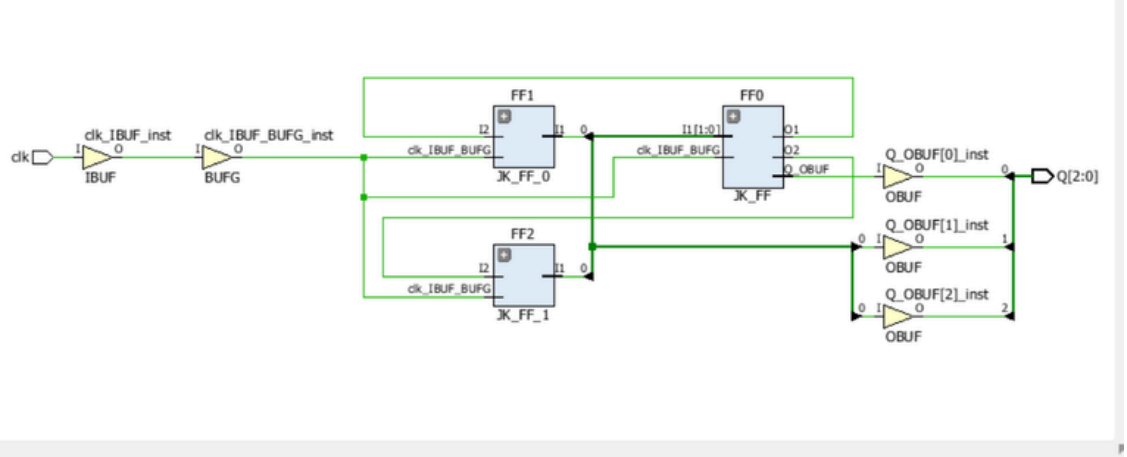

asynup

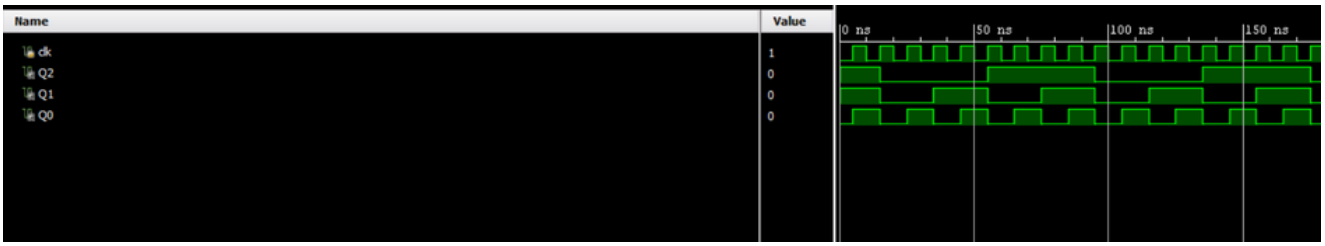

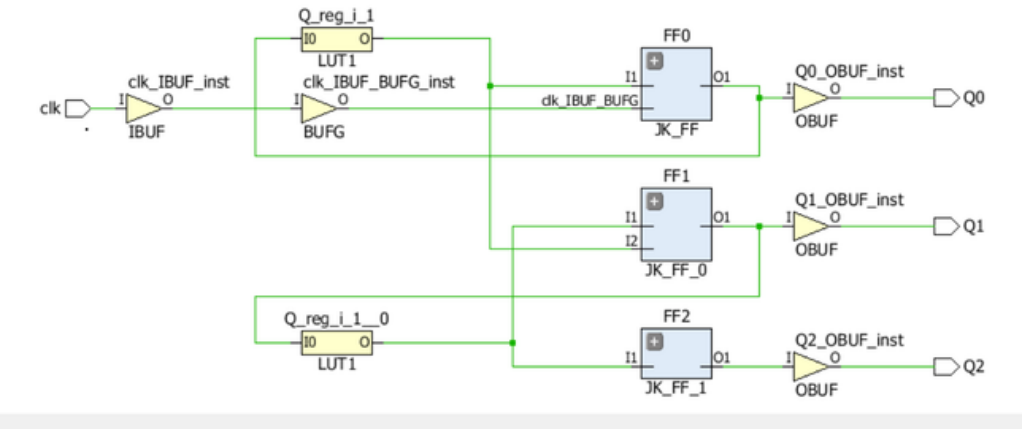

asyndown

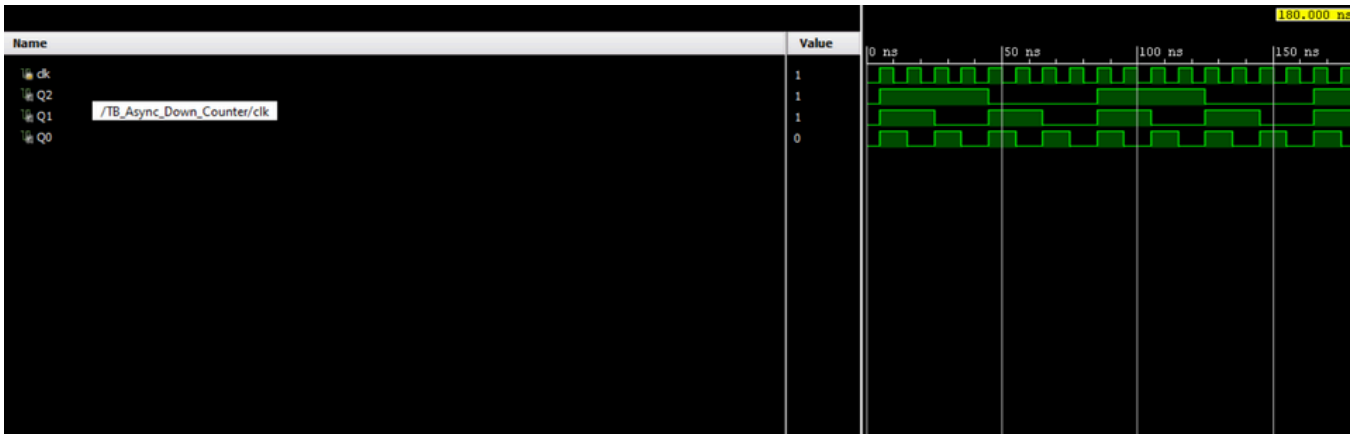

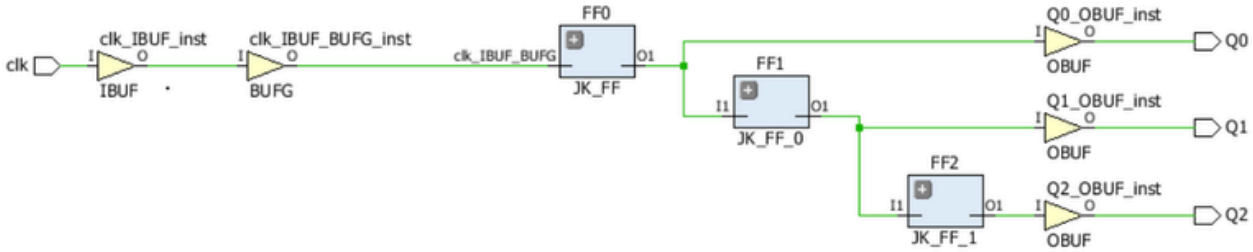
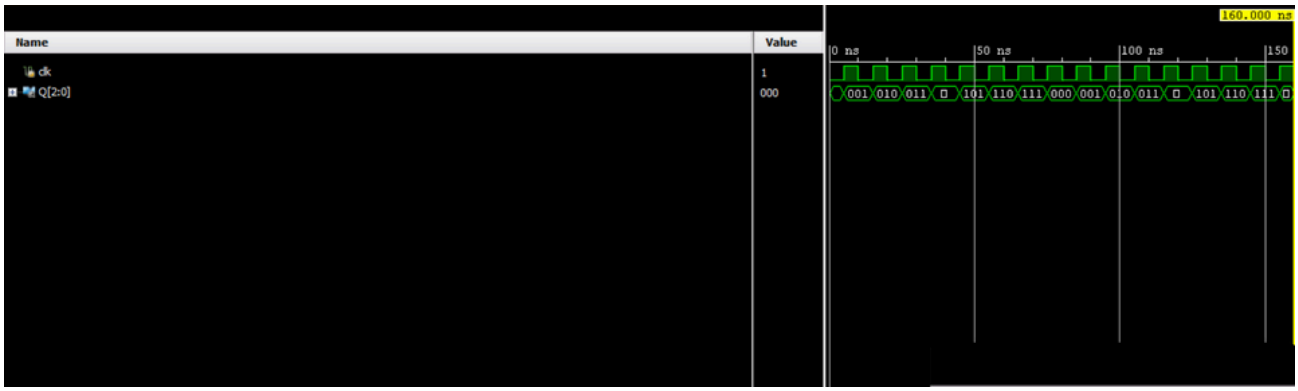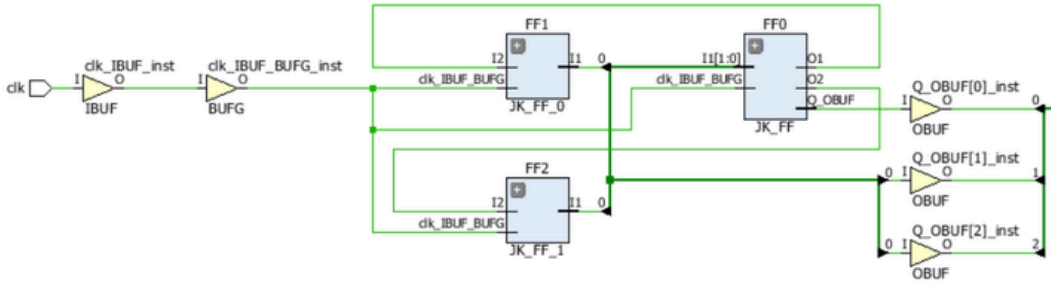
synup